Raychem®

RayClic Connection System

RayClic-PC Power Connection and End Seal Kit
RayClic-PS Powered Splice and End Seal Kit
RayClic-PT Powered Tee and End Seal Kit

Installation Instructions

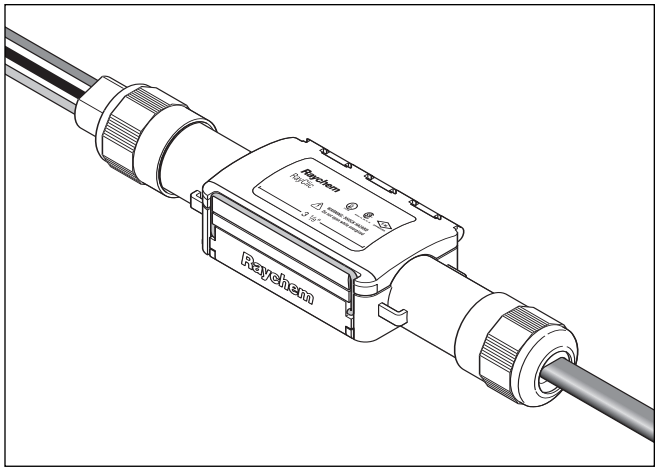

Approvals

718K Pipe Heating Cable
877Z De-icing and Snow-melting

Not UL Listed with XL-Trace heating cable for buried piping.

DESIG. 3A, 3B, 3C – XL-Trace, IceStop
DESIG. 3A – HWAT
DESIG. 2E – IceStop

with HWAT, IceStop, and XL-Trace heating cables

Class I, Div. 2, Groups A, B, C, D hazardous locations with GM-XT only

Description

These kits are for use with Raychem IceStop, XL-Trace, and HWAT heating cables. The connection is designed to be strapped to the pipe or mounted on the wall at the start of the heating cable circuit. These installation instructions should be used in conjunction with the IceStop (H56070), XL-Trace (H55617), and HWAT (H57548) System Installation and Operation Manuals.

For technical support contact your Tyco Thermal Controls representative or call Tyco Thermal Controls (800) 545-6258.

Tools Required

- Utility knife
- Phillips screwdriver
- Wire cutters
- Wrenches (2)

Additional UL Listed or CSA Certified materials required:

- 1/2-inch conduit and fittings
- Junction box

Optional Accessories (not included in this kit):

- RayClic-SB-02 Wall mounting bracket

Kit Contents

RayClic-PC Power Connection Kit

Item	Qty	Description	Item	Qty	Description
A	1	Power connection	D	1	Clip
B	1	Pipe mounting bracket	E	1	End seal
C	2	Plastic cable ties	F	4	Labels (1 HWAT, 1 Deicing & Snow Melting, 2 Warning)

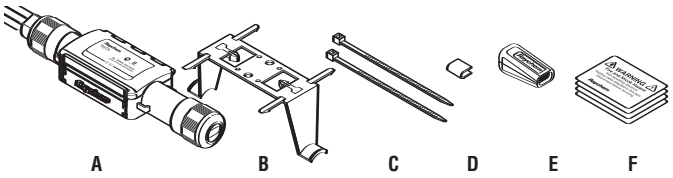

RayClic-PS Powered Splice Kit

Item	Qty	Description	Item	Qty	Description
A	1	Powered splice	D	2	Clips
B	1	Pipe mounting bracket	E	2	End seals
C	2	Plastic cable ties	F	4	Labels (1 HWAT, 1 Deicing & Snow Melting, 2 Warning)

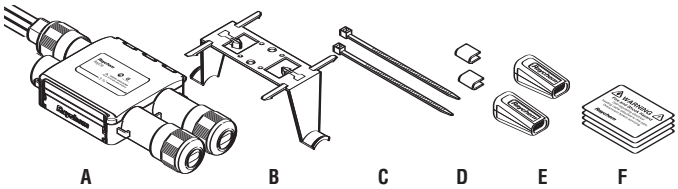

RayClic-PT Powered Tee Kit

Item	Qty	Description	Item	Qty	Description
A	1	Powered splice	D	3	Clips
B	1	Pipe mounting bracket	E	3	End seals
C	2	Plastic cable ties	F	4	Labels (1 HWAT, 1 Deicing & Snow Melting, 2 Warning)

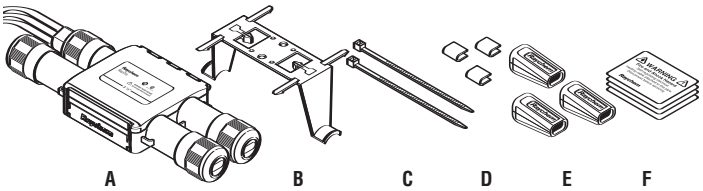

⚠ WARNING:

This component is an electrical device that must be installed correctly to ensure proper operation and to prevent shock or fire. Read these important warnings and carefully follow all the installation instructions.

- **To minimize the danger of fire from sustained electrical arcing if the heating cable is damaged or improperly installed, and to comply with the requirements of Tyco Thermal Controls, agency certifications, and national electrical codes, ground-fault equipment protection must be used. Arcing may not be stopped by conventional circuit breakers.**
- **Bus wires will short if they contact each other. Keep bus wires separated.**
- **Keep components and heating cable ends dry before and during installation.**
- **The black heating cable core is conductive and can short. It must be properly insulated and kept dry.**
- **Component approvals and performance are based on the use of Tyco Thermal Controls-specified parts only. Do not use substitute parts or vinyl electrical tape.**
- **Leave these instructions with end user for reference and future use.**

If you experience difficulty during installation, refer to the “Troubleshooting Guide” on page 7.

Power Connection, Splice and Tee Installation

1

• Using the plastic cable ties, attach* the bracket to the pipe.

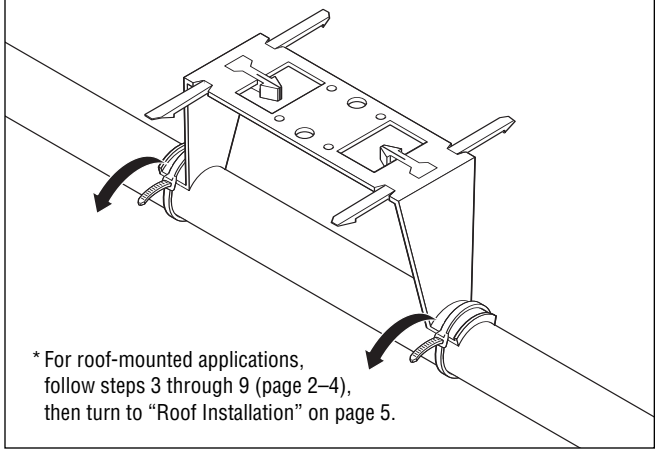

* For roof-mounted applications, follow steps 3 through 9 (page 2–4), then turn to “Roof Installation” on page 5.

2A

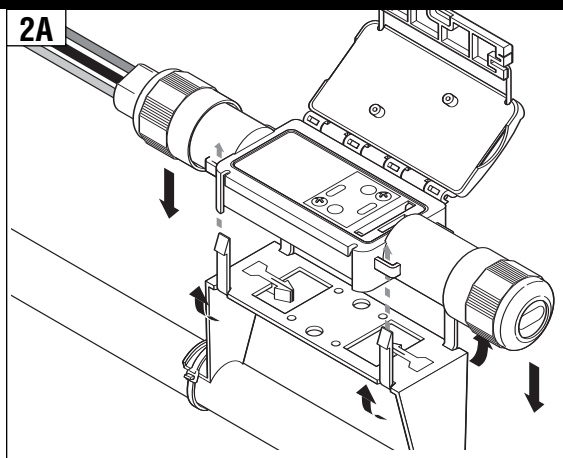

• For the RayClic-PC power connection, fold up the four outer snaps, then position the connector over the snaps and press down.

2B

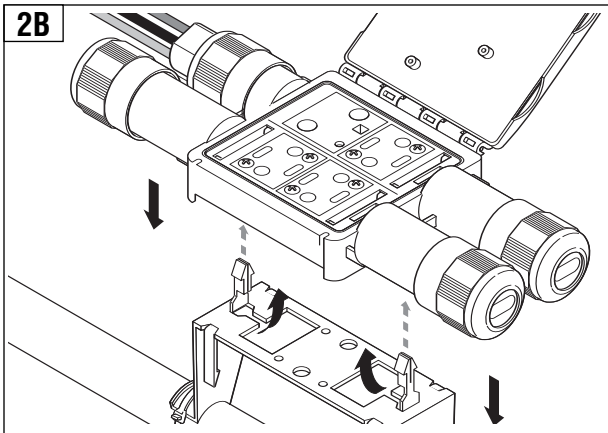

• For the RayClic-PS powered splice and the RayClic-PT powered tee, fold up two center snaps, then position the connector over the snaps and press down.

3

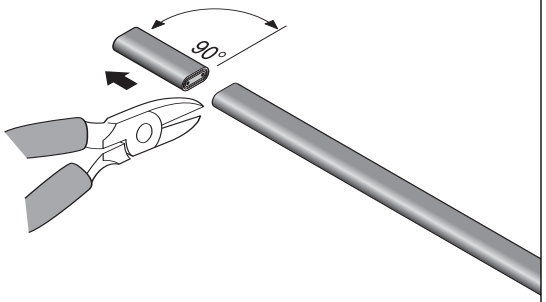

• Allow enough extra heating cable to make service loops as required.
• Make sure end of heating cable is cut clean.

4

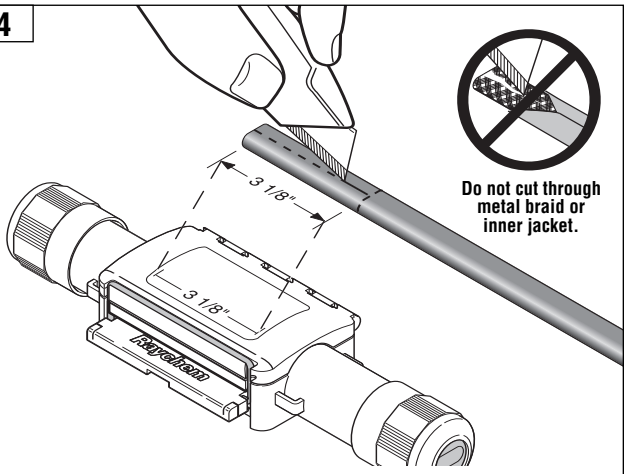

• Score around and down the outer jacket of the heating cable 3 1/8 inches from the end.

5

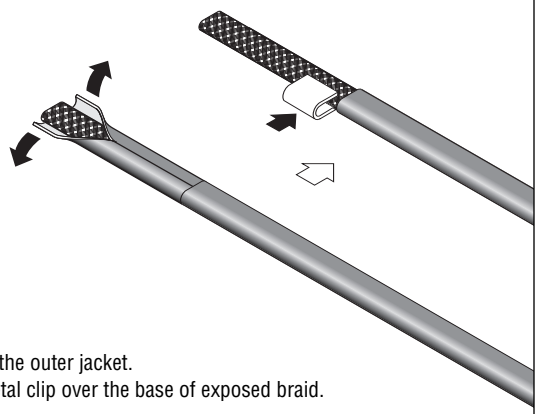

• Remove the outer jacket.
• Place metal clip over the base of exposed braid.

IceStop and XL-Trace

HWAT

6A

HWAT Only

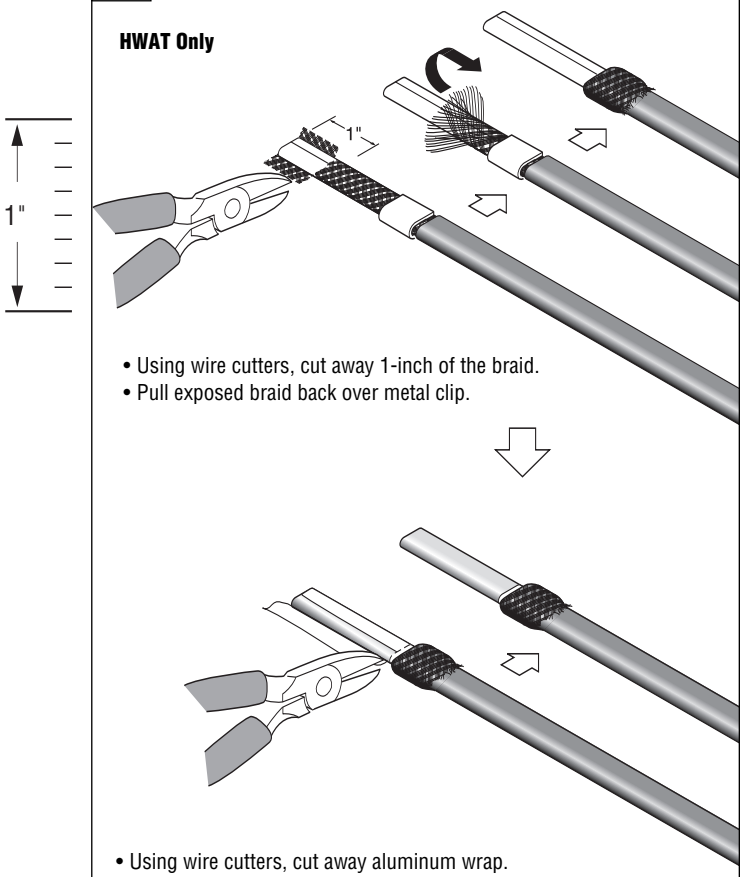

- Using wire cutters, cut away 1-inch of the braid.
- Pull exposed braid back over metal clip.

- Using wire cutters, cut away aluminum wrap.

6B

IceStop and XL-Trace Only

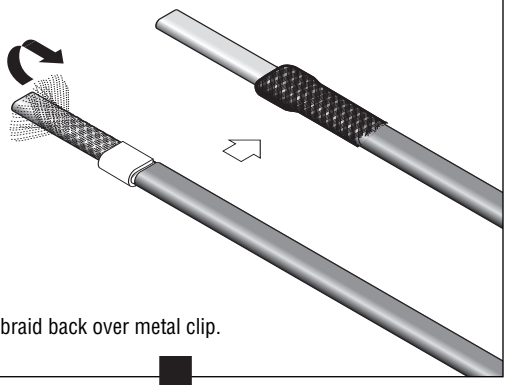

- Pull exposed braid back over metal clip.

7

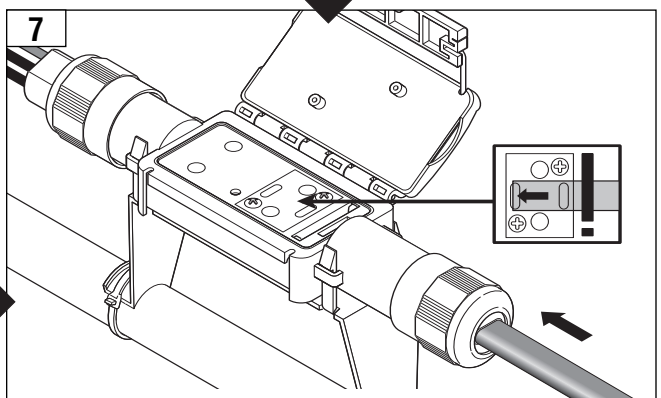

- Insert prepared heating cable end into connector. Push until heating cable is fully inserted and end is visible through opening in connection cover plate.

HWAT

8

- For HWAT only:
  Apply HWAT label on insulated hot water tank.

For HWAT Systems install this label on the hot water heater.

ATTENTION 150°F

DO NOT heat water above 150°F. Temperatures above 150°F will permanently reduce the power output of the HWAT heating cable on this hot water system.

Tyco Thermal Controls

9

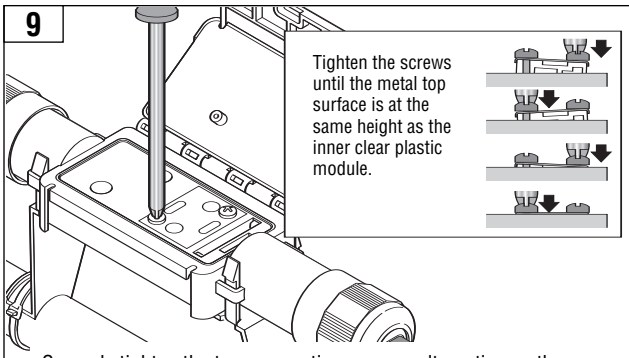

- Securely tighten the two connection screws, alternating as they are being tightened.
- For Powered Splice and Tee kits, repeat steps 3 through 8 for all remaining heating cable entries.

⚠ WARNING: Fire hazard. Loose screws can cause excessive heating. Be sure screws are fully tightened.

10

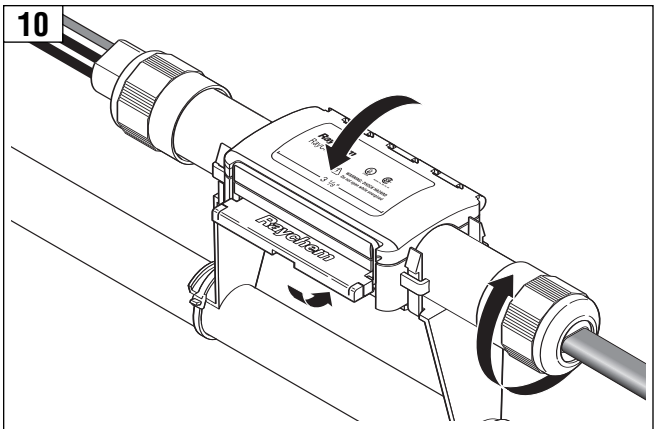

- Close the lid and snap the lever shut. Do not force lid closed; if lid does not close, check the connection to ensure all screws are fully tightened.
- Tighten the nuts on the heating cable entries until grommets are compressed.

11

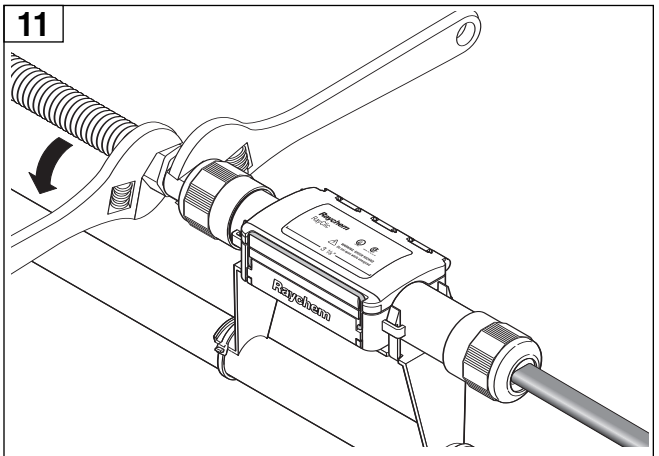

- Using two wrenches, attach user-supplied 1/2-inch conduit. To avoid breaking housing, do not exceed 15 ft-lbs of torque. Broken connectors must be replaced.

12A

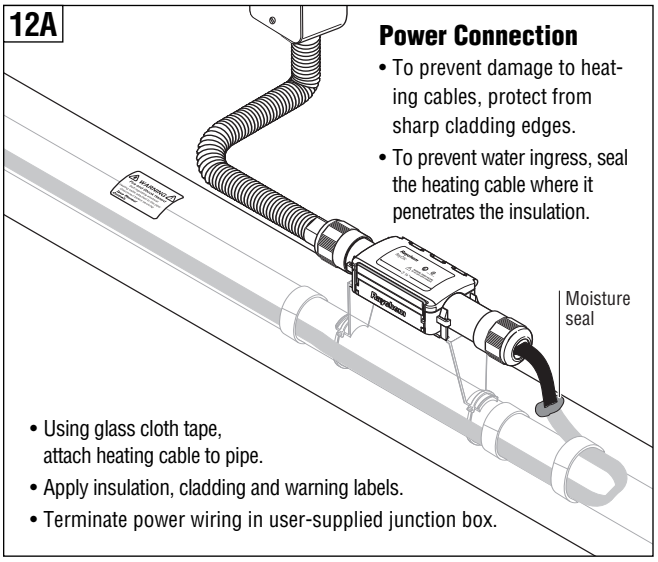

Power Connection

- To prevent damage to heating cables, protect from sharp cladding edges.
- To prevent water ingress, seal the heating cable where it penetrates the insulation.
- Using glass cloth tape, attach heating cable to pipe.
- Apply insulation, cladding and warning labels.
- Terminate power wiring in user-supplied junction box.

12B

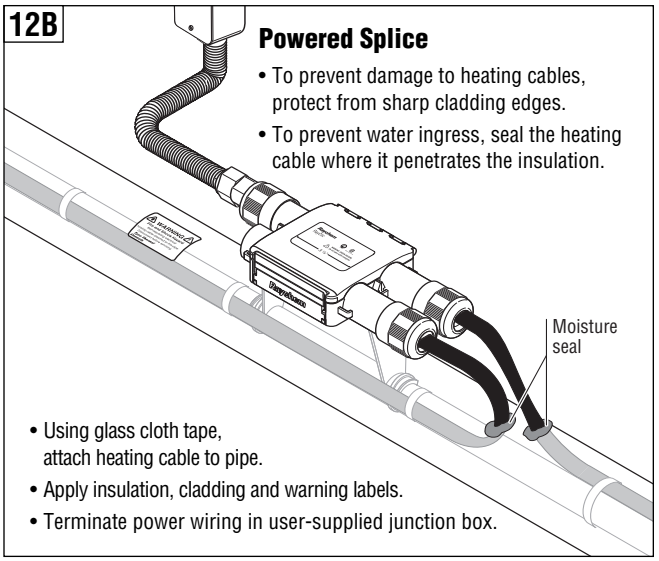

Powered Splice

- To prevent damage to heating cables, protect from sharp cladding edges.
- To prevent water ingress, seal the heating cable where it penetrates the insulation.
- Using glass cloth tape, attach heating cable to pipe.
- Apply insulation, cladding and warning labels.
- Terminate power wiring in user-supplied junction box.

12C

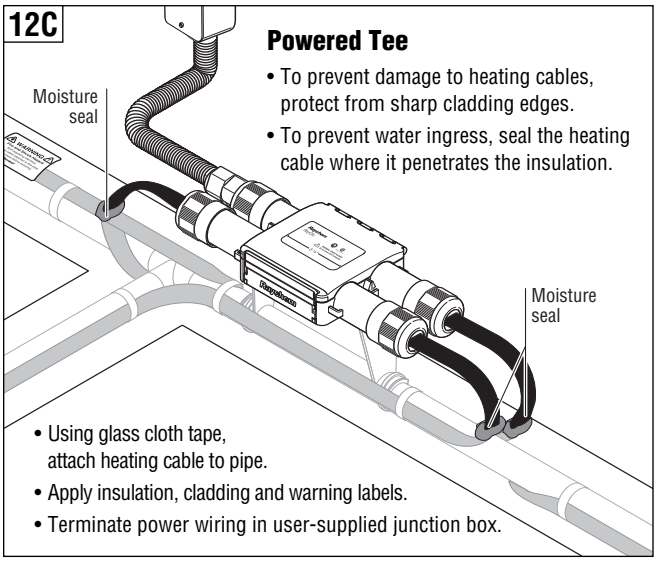

Powered Tee

- To prevent damage to heating cables, protect from sharp cladding edges.
- To prevent water ingress, seal the heating cable where it penetrates the insulation.
- Using glass cloth tape, attach heating cable to pipe.
- Apply insulation, cladding and warning labels.
- Terminate power wiring in user-supplied junction box.

Roof Installation

1

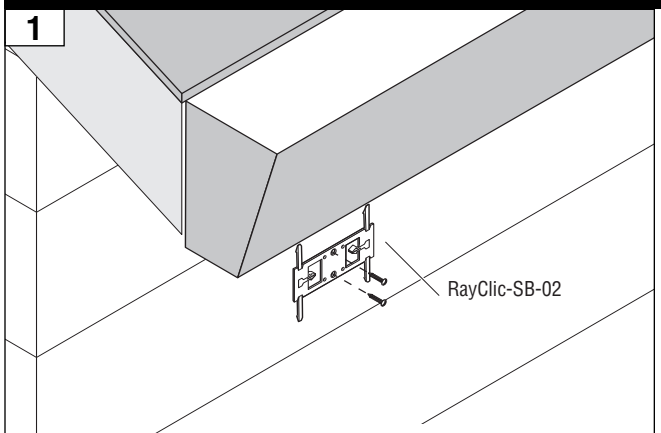

- Mount flat (wall mounting) bracket under eaves by installing screws through the center holes. **Do not mount in gutter or where it may be immersed in water.**

2

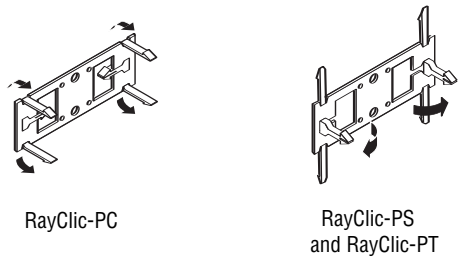

- Position attachment clips on mounting bracket based on type connector being installed.

3

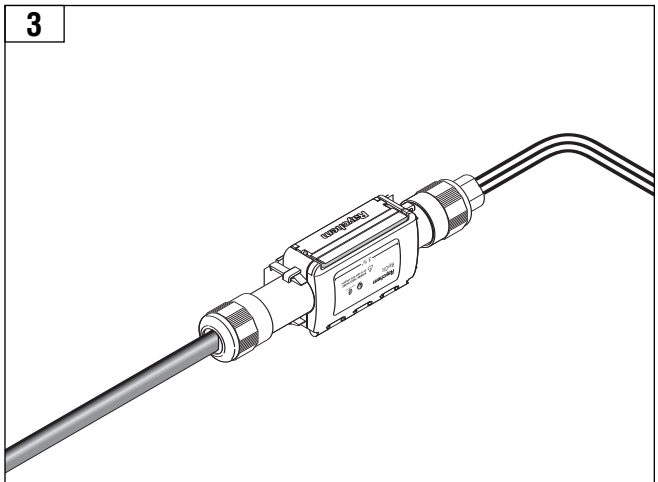

- Connect heating cable as detailed in steps 3 through 9 (pages 2–4).

4

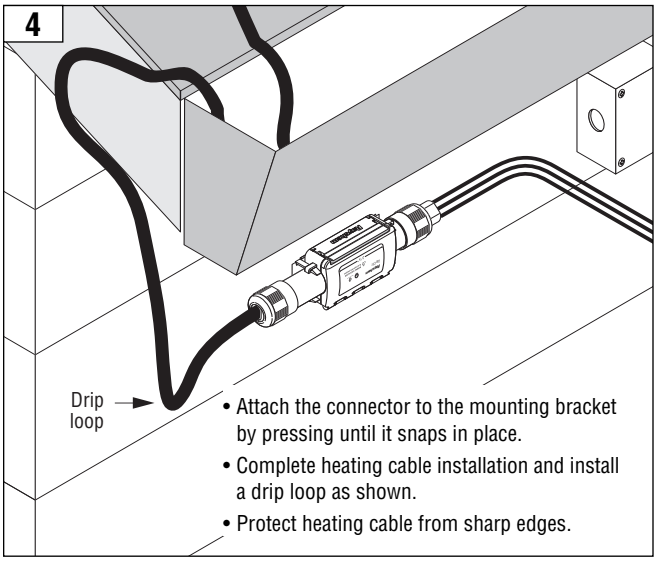

- Attach the connector to the mounting bracket by pressing until it snaps in place.
- Complete heating cable installation and install a drip loop as shown.
- Protect heating cable from sharp edges.

5

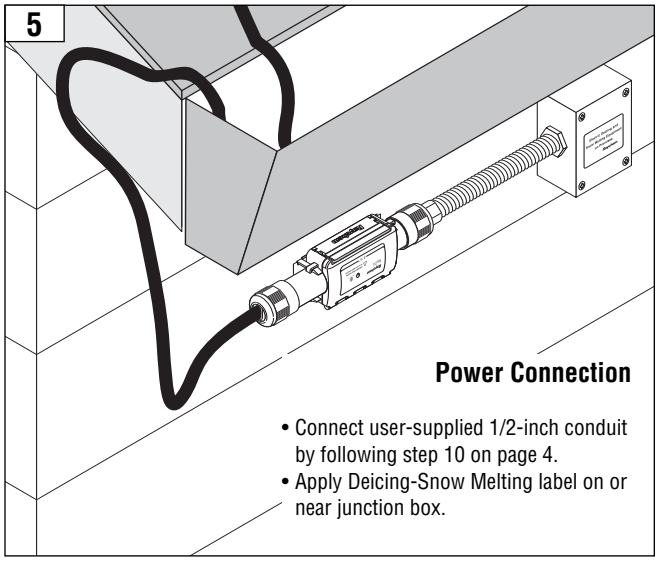

Power Connection

- Connect user-supplied 1/2-inch conduit by following step 10 on page 4.
- Apply Deicing-Snow Melting label on or near junction box.

End Seal Installation

1

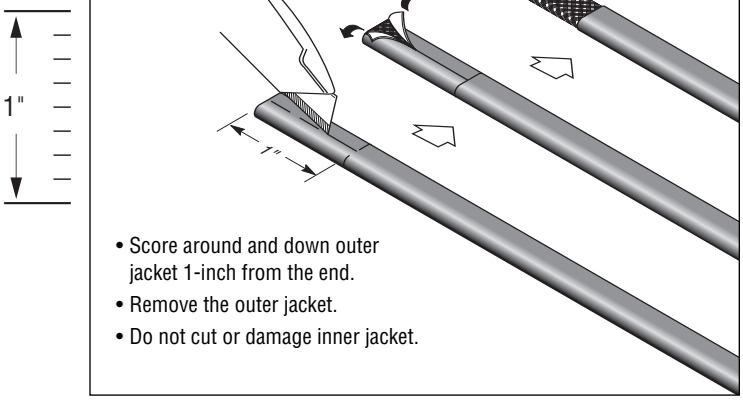

- Score around and down outer jacket 1-inch from the end.
- Remove the outer jacket.
- Do not cut or damage inner jacket.

2

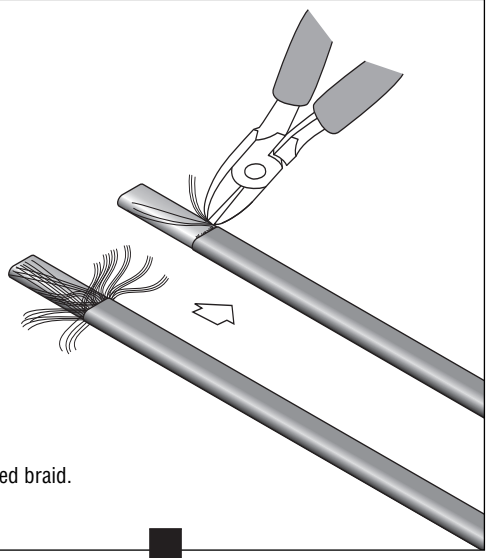

- Remove exposed braid.

HWAT

2A

- Using wire cutters, cut away aluminum wrap close to braid and outer jacket.

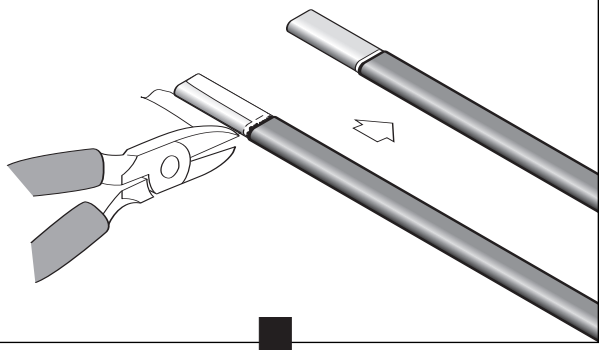

IceStop and XL-Trace

3

- Push end seal completely onto heating cable.

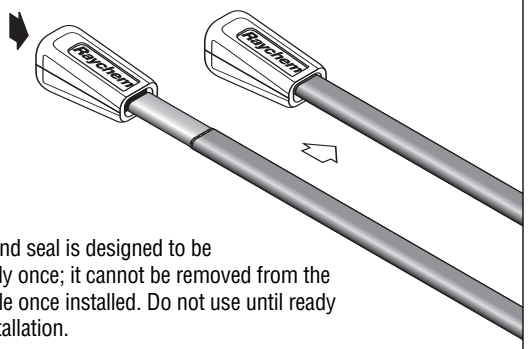

Note: The end seal is designed to be installed only once; it cannot be removed from the heating cable once installed. Do not use until ready for final installation.

Troubleshooting Guide

Problem	Solution
Braid clips are missing.	The braid clips are attached to the cardboard packing insert under the lid. The braid clips must be used to ensure a ground connection. If clips are missing or lost, call Tyco Thermal Controls at (800) 545-6258.
Mounting bracket is missing.	A pipe mounting bracket is supplied with the Power Connection, Powered Splice and Powered Tee kits. A wall mounting bracket or additional pipe mounting bracked may be ordered using one of the catalog numbers listed under “Optional Accessories” on the front page of these instructions when you place your order.
Connector does not snap onto bracket.	The bracket has two sets of attachment clips. Fold up the four outer clips for the Power Connection kit. Fold up only the center clips for the Powered Splice and Powered Tee kits.
Heating cable type not mentioned.	RayClic components are approved for use only with Raychem HWAT, XL-Trace, and IceStop heating cables. Do not use with other heating cables.
Braid clip does not fit.	Be sure the clip is installed on the metal braid, not on the outer jacket.
Heating cable does not have aluminum wrap.	Only HWAT heating cables have the aluminum wrap under the braid. Skip the aluminum wrap removal step for XL-Trace and IceStop heating cables.
Heating cable cannot be inserted into connector.	Check for the following: • Outer jacket strip length is 3 1/8-inches. • Braid clip is installed on top of the metal braid, not on the outer jacket. • Braid is pulled back over braid clip. • For HWAT, 1-inch of braid is removed. • Sealing nut is loose (but not removed). • Connection screws are loose.
Lid does not close.	Be sure all screws are fully tightened before closing the lid.
Heating cable cannot be inserted into end seal.	The outer jacket must be removed from the heating cable before the end seal is installed (see the “End Seal Installation” instructions on page 6). Make sure 1-inch of outer jacket, braid, and aluminum wrap (HWAT only) are removed.
Heating cable cannot be removed.	The power connection and end seal are designed to be installed only once; the heating cable cannot be removed once installed. Additional RayClic -E end seals can be ordered from Tyco Thermal Controls.

Tyco, HWAT, IceStop, Raychem, RayClic, and XL-Trace are trademarks of Tyco Thermal Controls LLC or its affiliates.

Worldwide Headquarters
Tyco Thermal Controls
300 Constitution Drive
Menlo Park, CA 94025-1164
USA
Tel (800) 545-6258
Fax (800) 596-5004
info@tycothermal.com
www.tycothermal.com

Canada
Tyco Thermal Controls
250 West St.
Trenton, Ontario
Canada K8V 5S2
Tel (800) 545-6258
Fax (800) 527-5703

Important: *All information, including illustrations, is believed to be reliable. Users, however, should independently evaluate the suitability of each product for their particular application. Tyco Thermal Controls makes no warranties as to the accuracy or completeness of the information, and disclaims any liability regarding its use. Tyco Thermal Controls' only obligations are those in the Tyco Thermal Controls Standard Terms and Conditions of Sale for this product, and in no case will Tyco Thermal Controls or its distributors be liable for any incidental, indirect, or consequential damages arising from the sale, resale, use, or misuse of the product. Specifications are subject to change without notice. In addition, Tyco Thermal Controls reserves the right to make changes—without notification to Buyer—to processing or materials that do not affect compliance with any applicable specification.*

© 1995, 1998, 1999, 2003, 2004 Tyco Thermal Controls LLC INST-172 PN 511491-000 H55092 12/04